AlphaServer 8200 5/350

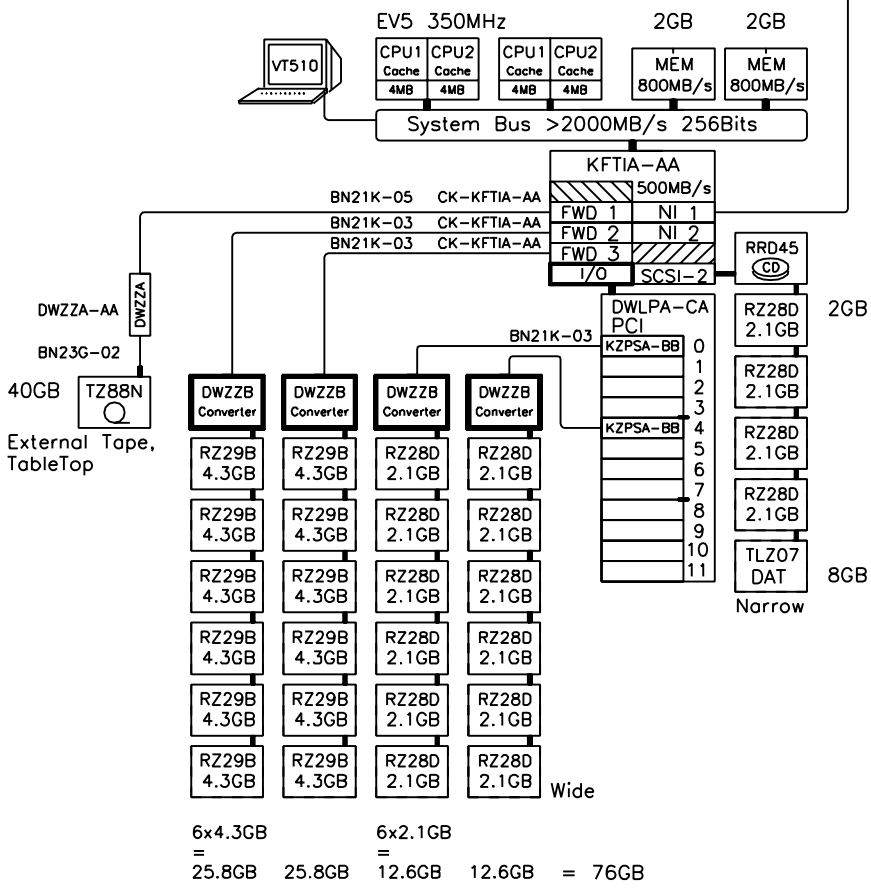

One Cabinet System:

- Digital UNIX or OpenVMS
- 4x Alpha Processors at 350MHz
- 4GB Memory
- 24x Disks, 76GB
- Tape 40GB

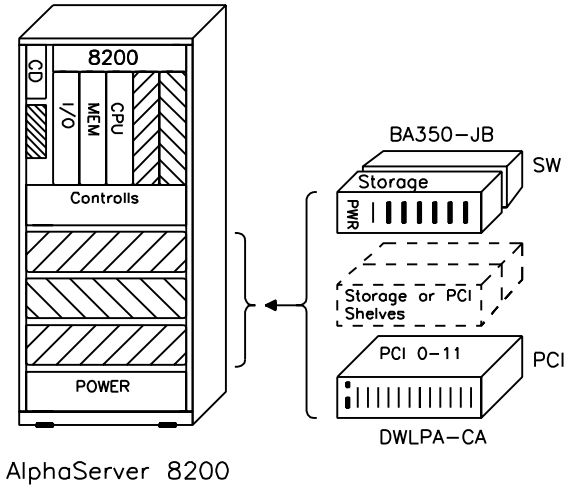

GEAS821B

digital | 18-Apr-1996 | Detail Layer | GOLDas82005350b

8200

AlphaServer 8200 5/350 Systems

GOLDEN EGGS Visual Configurations, Helsinki