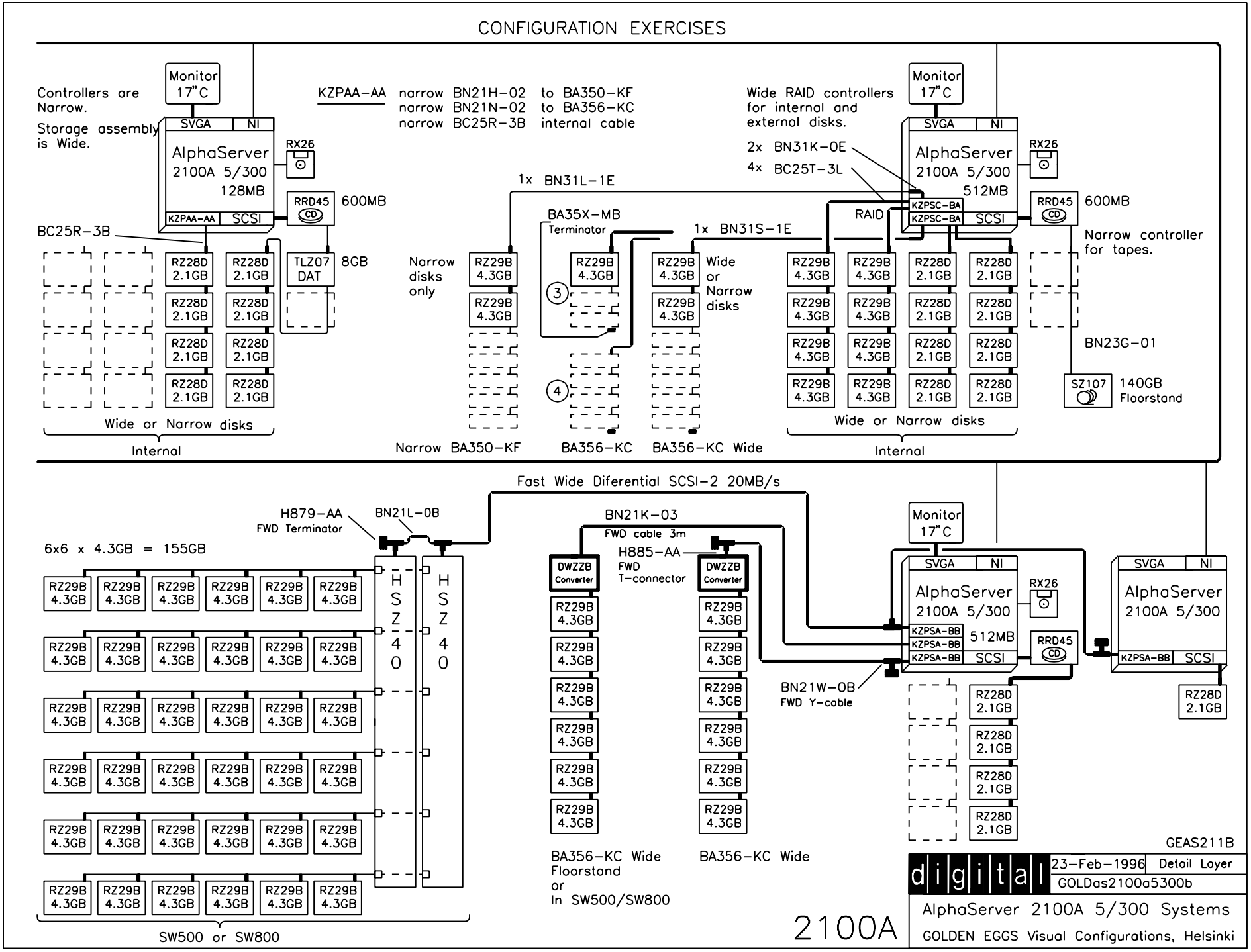
CONFIGURATION EXERCISES
Controllers are Narrow.
Storage assembly is Wide.
Monitor 17"C
SVGA
NI
AlphaServer 2100A 5/300 128MB
KZPAA-AA
SCSI
RX26
RRD45
CD
600MB
BC25R-3B
RZ28D 2.1GB
TLZ07 DAT
8GB
Wide or Narrow disks
Internal
KZPAA-AA narrow BN21H-02 to BA350-KF
narrow BN21N-02 to BA356-KC
narrow BC25R-3B internal cable
1x BN31L-1E
BA35X-MB
Terminator
1x BN31S-1E
Narrow disks only
RZ29B 4.3GB
Wide or Narrow disks
Narrow BA350-KF
BA356-KC
BA356-KC Wide
Wide RAID controllers for internal and external disks.
2x BN31K-0E
4x BC25T-3L
AlphaServer 2100A 5/300 512MB
KZPSC-BA
RAID
Narrow controller for tapes.
BN23G-01
SZ107
140GB Floorstand
Fast Wide Diferential SCSI-2 20MB/s
H879-AA
FWD Terminator
BN21L-0B
6x6 x 4.3GB = 155GB
HSZ40
SW500 or SW800
BN21K-03
FWD cable 3m
H885-AA
FWD T-connector
DWZZB Converter
BA356-KC Wide Floorstand or In SW500/SW800
BN21W-0B
FWD Y-cable
KZPSA-BB
GEAS211B
digital
23-Feb-1996
Detail Layer
GOLDas2100a5300b
AlphaServer 2100A 5/300 Systems
GOLDEN EGGS Visual Configurations, Helsinki
2100A