HP ProLiant DL-Family

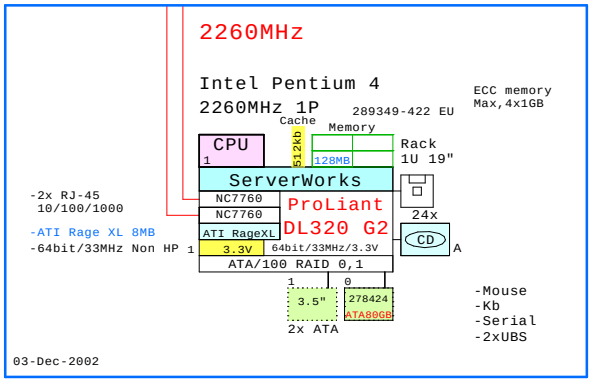

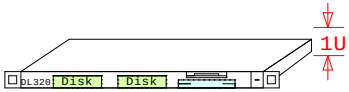

DL320 G2

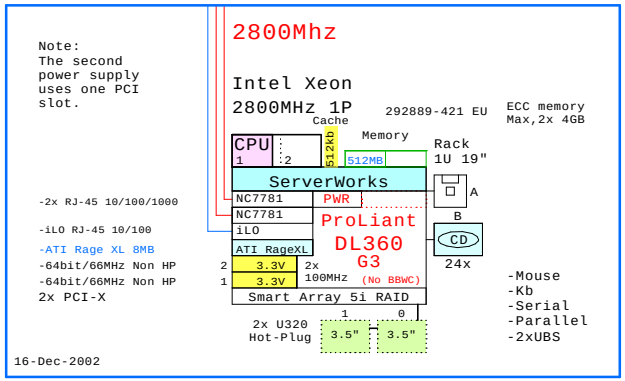

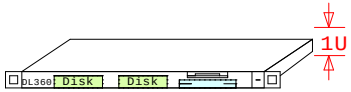

DL360 G3

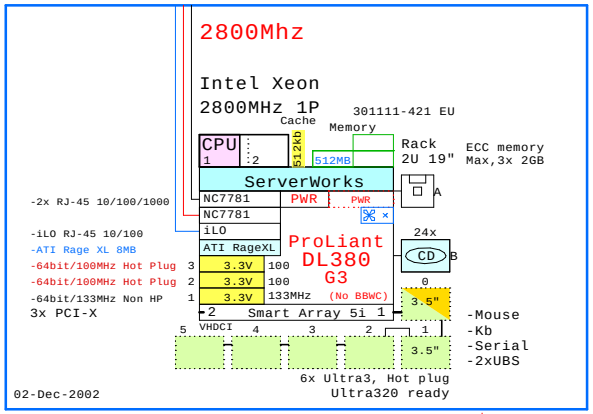

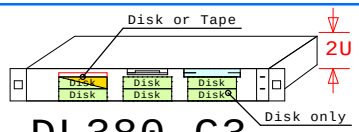

DL380 G3

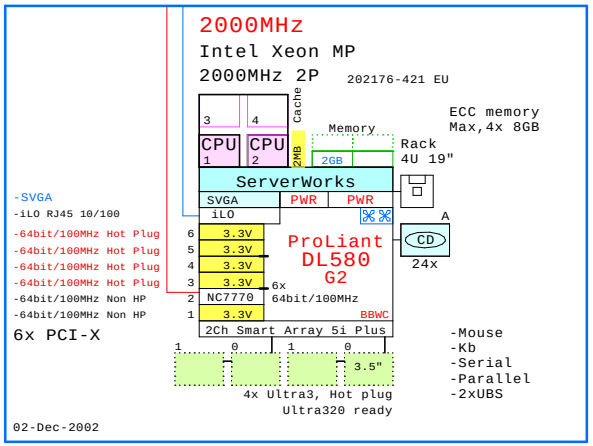

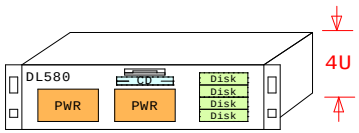

DL580 G2

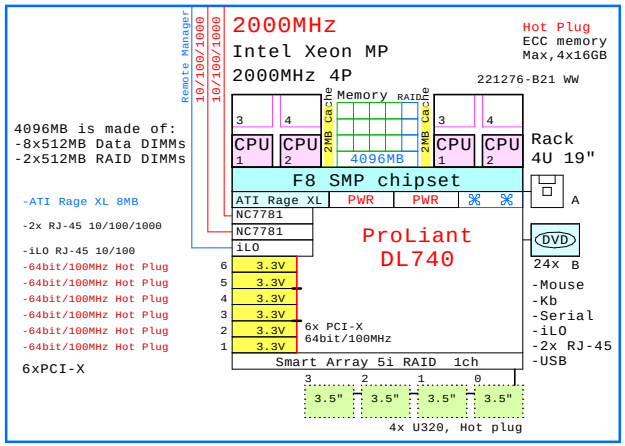

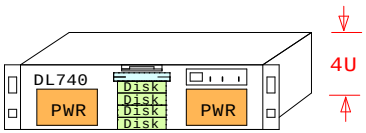

DL740

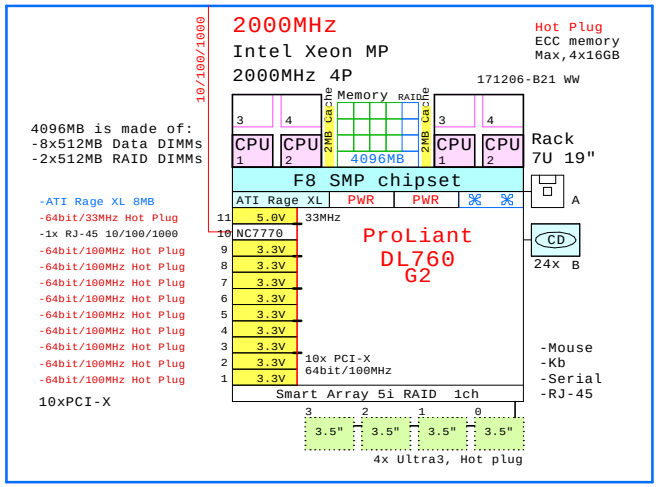

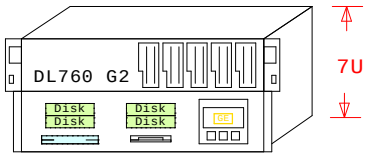

DL760 G2

GEI00G

www.Compaq.com/golden-eggs

Since:Jan-2002

12-Mar-2003	GEI00G
Matti.Patari@hp.com	

HP ProLiant DL-Family
GOLDEN EGGS Visuals, Helsinki

DL-Family

Generated with fresh GOLDEN EGGS Software, Rev:12-Mar-2003