AlphaServer GS1280 M16 OpenVMS System

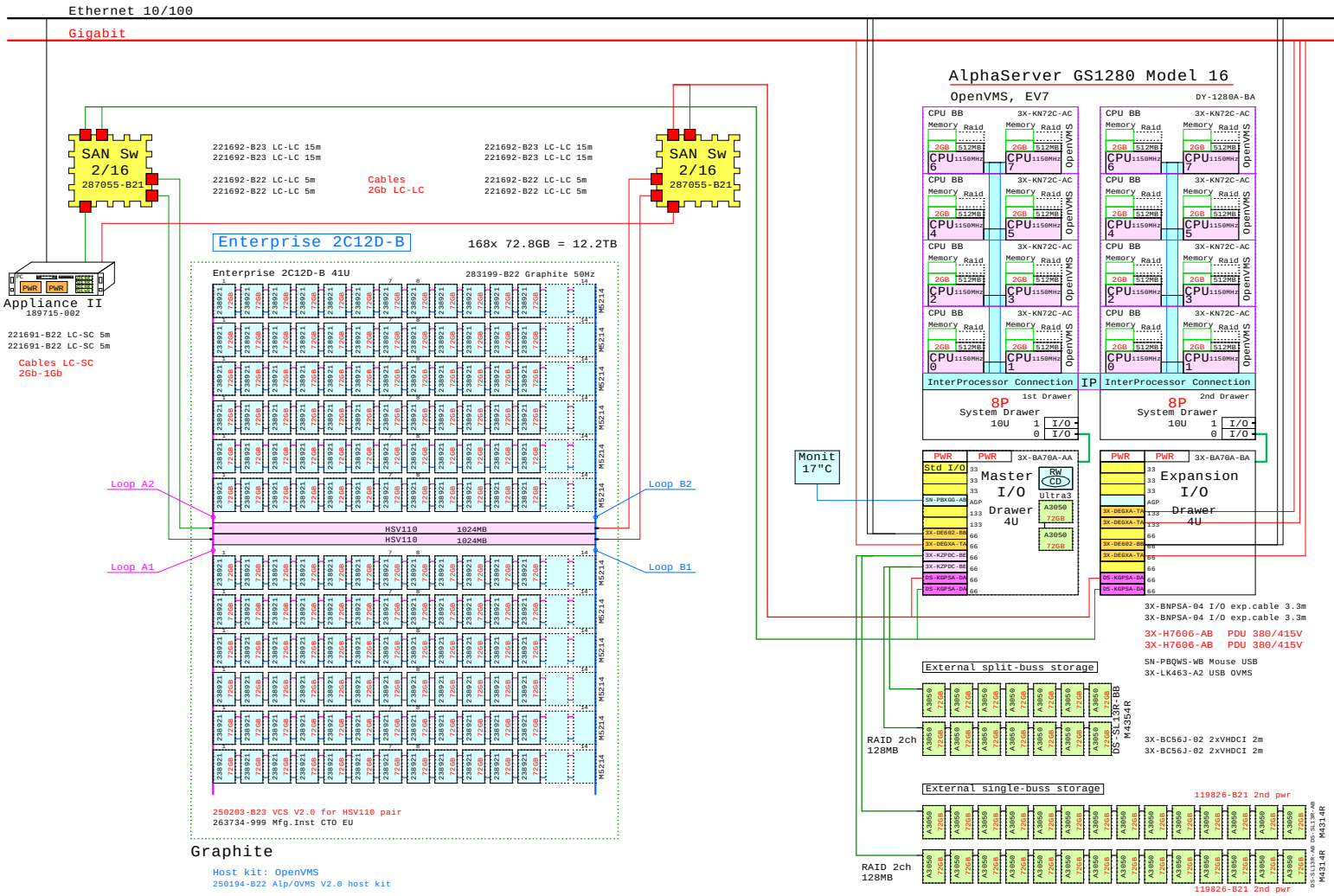

BOM for GS1280 M16 cabinet

	Part Number	Qty	Description
1	DY-1280A-BA	1	AS GS1280 Model 16 System OpenVMS Cabine
1.1	3X-BA70A-AA	1	ES47 Master I/O drawer 4U factory inst.
1.1.1	3R-A3050-AA	2	72.8GB 10000r Ultra3 SCSI disk 1"
1.1.2	3X-DE602-BB	1	10/100 2xChannel Fast Ethernet, UTP
1.1.3	3X-DEGXA-TA	1	GigabitEthernet single-p 66MHz 3.3V
1.1.4	3X-KZPDC-BE	2	U160 2-Ch RAID 128MB PCI 66MHz 3.3v
1.1.5	DS-KGPSA-DA	2	PCI to Fibre Channel adapter,2Gbit/s
1.1.6	SN-PBXGG-AB	1	ATI Radeon 7500 2D AGP graphics accelara
1.2	3X-BA70A-BA	1	ES47 Expansion I/O drawer 4U factory ins
1.2.1	3X-DE602-BB	1	10/100 2xChannel Fast Ethernet, UTP
1.2.2	3X-DEGXA-TA	3	GigabitEthernet single-p 66MHz 3.3V
1.2.3	DS-KGPSA-DA	2	PCI to Fibre Channel adapter,2Gbit/s
1.3	3X-KN72C-AC	1	GS1280 CPU-BB 2xEV7 1150MHz OpenVMS
1.3.1	3X-MS7AB-CA	1	GS-ES 2GBB Memory Option 4x512 RDRAM
1.3.1.1	3X-MS7AB-CC	1	GS-ES 512MB RAID Memory 1x512MB RDRAM
1.3.2	3X-MS7AB-CA	1	GS-ES 2GBB Memory Option 4x512 RDRAM
1.3.2.1	3X-MS7AB-CC	1	GS-ES 512MB RAID Memory 1x512MB RDRAM
1.4	3X-KN72C-AC	1	GS1280 CPU-BB 2xEV7 1150MHz OpenVMS
1.4.1	3X-MS7AB-CA	1	GS-ES 2GBB Memory Option 4x512 RDRAM
1.4.1.1	3X-MS7AB-CC	1	GS-ES 512MB RAID Memory 1x512MB RDRAM
1.4.2	3X-MS7AB-CA	1	GS-ES 2GBB Memory Option 4x512 RDRAM
1.4.2.1	3X-MS7AB-CC	1	GS-ES 512MB RAID Memory 1x512MB RDRAM
1.5	3X-KN72C-AC	1	GS1280 CPU-BB 2xEV7 1150MHz OpenVMS
1.5.1	3X-MS7AB-CA	1	GS-ES 2GBB Memory Option 4x512 RDRAM
1.5.1.1	3X-MS7AB-CC	1	GS-ES 512MB RAID Memory 1x512MB RDRAM
1.5.2	3X-MS7AB-CA	1	GS-ES 2GBB Memory Option 4x512 RDRAM
1.5.2.1	3X-MS7AB-CC	1	GS-ES 512MB RAID Memory 1x512MB RDRAM
1.6	3X-KN72C-AC	1	GS1280 CPU-BB 2xEV7 1150MHz OpenVMS
1.6.1	3X-MS7AB-CA	1	GS-ES 2GBB Memory Option 4x512 RDRAM
1.6.1.1	3X-MS7AB-CC	1	GS-ES 512MB RAID Memory 1x512MB RDRAM
1.6.2	3X-MS7AB-CA	1	GS-ES 2GBB Memory Option 4x512 RDRAM
1.6.2.1	3X-MS7AB-CC	1	GS-ES 512MB RAID Memory 1x512MB RDRAM
1.7	3X-KN72C-AC	1	GS1280 CPU-BB 2xEV7 1150MHz OpenVMS
1.7.1	3X-MS7AB-CA	1	GS-ES 2GBB Memory Option 4x512 RDRAM
1.7.1.1	3X-MS7AB-CC	1	GS-ES 512MB RAID Memory 1x512MB RDRAM
1.7.2	3X-MS7AB-CA	1	GS-ES 2GBB Memory Option 4x512 RDRAM
1.7.2.1	3X-MS7AB-CC	1	GS-ES 512MB RAID Memory 1x512MB RDRAM
1.8	3X-KN72C-AC	1	GS1280 CPU-BB 2xEV7 1150MHz OpenVMS
1.8.1	3X-MS7AB-CA	1	GS-ES 2GBB Memory Option 4x512 RDRAM
1.8.1.1	3X-MS7AB-CC	1	GS-ES 512MB RAID Memory 1x512MB RDRAM
1.8.2	3X-MS7AB-CA	1	GS-ES 2GBB Memory Option 4x512 RDRAM
1.8.2.1	3X-MS7AB-CC	1	GS-ES 512MB RAID Memory 1x512MB RDRAM
1.9	3X-KN72C-AC	1	GS1280 CPU-BB 2xEV7 1150MHz OpenVMS
1.9.1	3X-MS7AB-CA	1	GS-ES 2GBB Memory Option 4x512 RDRAM
1.9.1.1	3X-MS7AB-CC	1	GS-ES 512MB RAID Memory 1x512MB RDRAM
1.9.2	3X-MS7AB-CA	1	GS-ES 2GBB Memory Option 4x512 RDRAM
1.9.2.1	3X-MS7AB-CC	1	GS-ES 512MB RAID Memory 1x512MB RDRAM
1.10	3X-KN72C-AC	1	GS1280 CPU-BB 2xEV7 1150MHz OpenVMS
1.10.1	3X-MS7AB-CA	1	GS-ES 2GBB Memory Option 4x512 RDRAM
1.10.1.1	3X-MS7AB-CC	1	GS-ES 512MB RAID Memory 1x512MB RDRAM
1.10.2	3X-MS7AB-CA	1	GS-ES 2GBB Memory Option 4x512 RDRAM
1.10.2.1	3X-MS7AB-CC	1	GS-ES 512MB RAID Memory 1x512MB RDRAM
2	DS-SL13R-AB	1	Modula M4314R single buss,14x 1.0" Int
2.1	3R-A3050-AA	14	72.8GB 10000r Ultra3 SCSI disk 1"
3	DS-SL13R-AB	1	Modula M4314R single buss,14x 1.0" Int
3.1	3R-A3050-AA	14	72.8GB 10000r Ultra3 SCSI disk 1"
4	DS-SL13R-BB	1	Modula M4354R dual buss, 7+7, 1.0" Int
4.1	3R-A3050-AA	14	72.8GB 10000r Ultra3 SCSI disk 1"
5	3X-H9A45-ZA	1	41U 11000-Series Exp-Cabinet,no PDUs
6	YS-ASCAA-AA	1	System Factory Integration
7	3R-A3389-AA	1	COMPAQ Monitor P720 17" NH, EU VGAcable
8	3X-H7606-AB	4	PDU 380/415V
9	3X-BNPSA-04	2	GS1280 I/O expansion cable 3.3m
10	3X-BC56J-02	4	Ultra3 160 Cable VHDCI-VHDCI 06ft
11	SN-PBQWS-WB	1	Compaq 3-button mouse, USB
12	3X-LK463-A2	1	U.S/English keyboard OpenVMS, USB
13	119826-B21	2	Modula M42/314R 2nd power supply

BOM for Enterprise storage

	Part Number	Qty	Description
1	283199-B22	1	Enterprise 2C12D-B FC 50HZ 41U Graphite
1.1	238921-B21	144	72GB 10k dual-port FC 2GB/s disk 1"
1.2	250203-B23	1	SAN VCS SW DUAL HSV110 V2.0 PKG License
1.3	263734-999	1	Enterprise CTO Factory inst. opt. EU
2	287055-B21	1	SAN Switch 2/16 Ports 16, 2Gb/s d.power
2.1	221470-B21	5	Opt.Short Wave Tranceiver 2Gb/s SFP-SW
3	287055-B21	1	SAN Switch 2/16 Ports 16, 2Gb/s d.power
3.1	221470-B21	5	Opt.Short Wave Tranceiver 2Gb/s SFP-SW
4	189715-002	1	SANworks Mgt. Appliance II and license
5	250194-B22	1	SAN Enterp. SOL V2.0 OpenVMS Alpha host
6	221692-B23	4	FC ShortWave 15m cable LC-LC 2Gb-2Gb
7	221692-B22	4	FC ShortWave 5m cable LC-LC 2Gb-2Gb
8	221691-B22	2	FC ShortWave 5m cable LC-SC 1Gb-2Gb

Generated with fresh GOLDEN EGGS Software, Rev:12-Nov-2002

www.Compaq.com/golden-eggs

Since:Nov-2002

15-Nov-2002	GTAVGS1280M16a
Matti.Patari@HP.com	

AlphaServer GS1280 M16 OVMS Sy
GOLDEN EGGS Visuals, Helsinki

GS1280 M16 OVMS